REAR FLOOR PAN (ASSY)

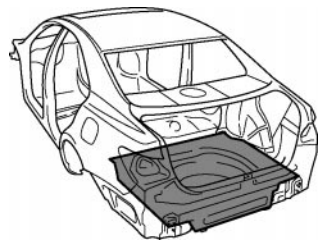

F25915A

With the rear floor No.3 crossmember removed.

Symbol meaning

◆ ◆M ◆1 : Remove Weld Points

F25915B

REMOVAL

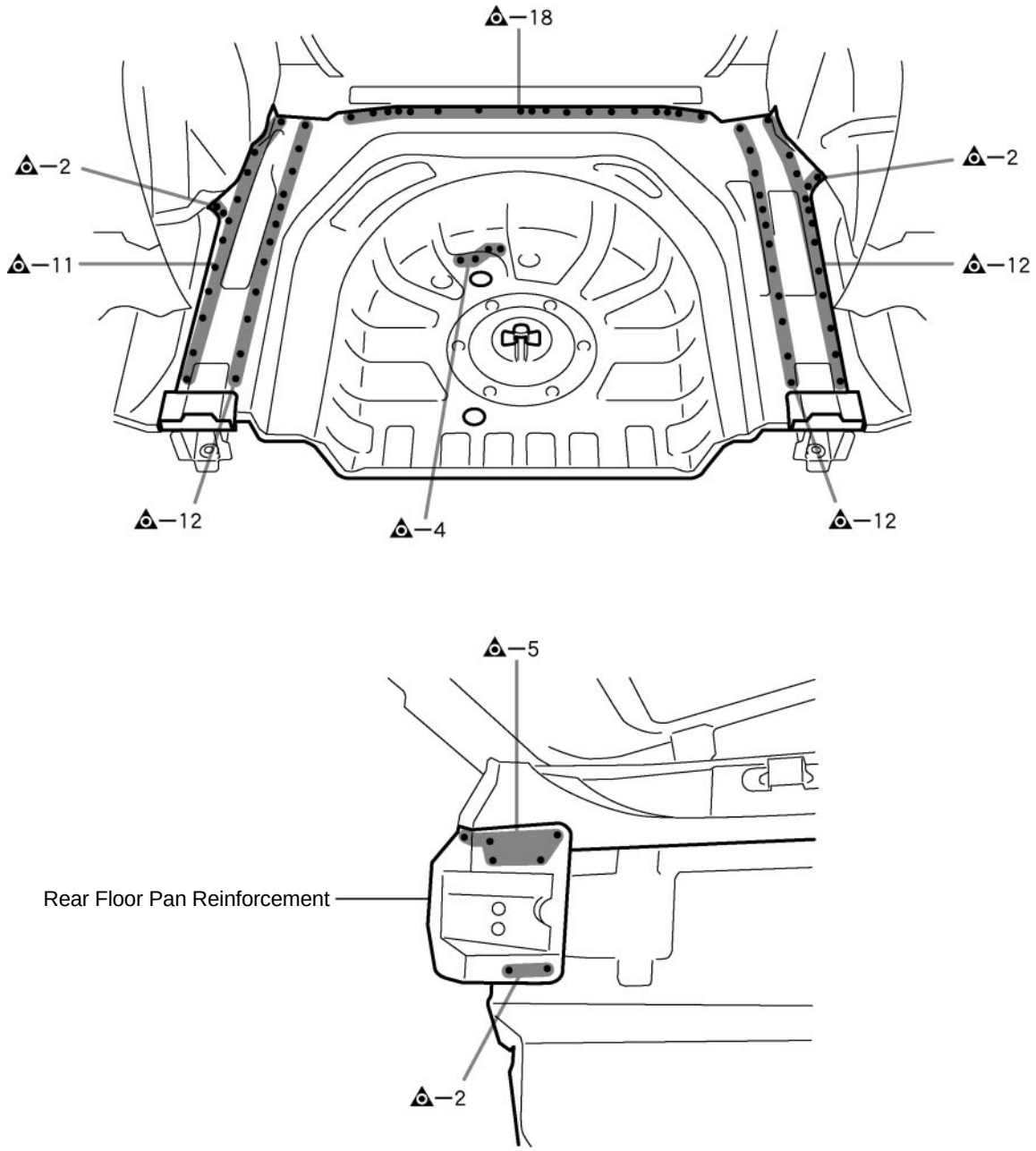

F25915

REMOVAL POINT

1 Remove the rear floor pan reinforcement at the same time.

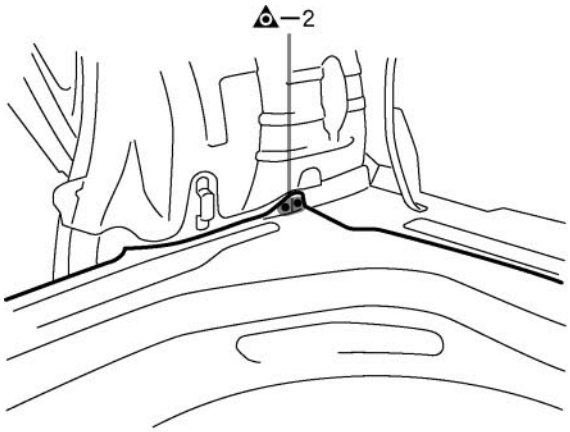

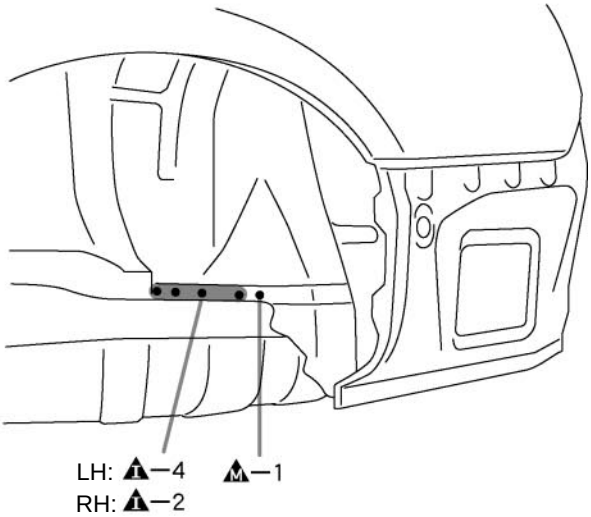

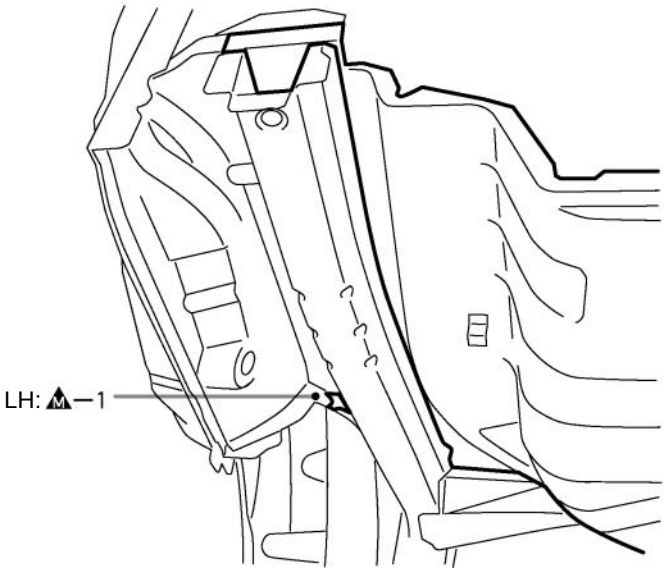

F25916

Symbol meaning

O M I : MIG Plug Weld : Tack Weld

F25917B

INSTALLATION

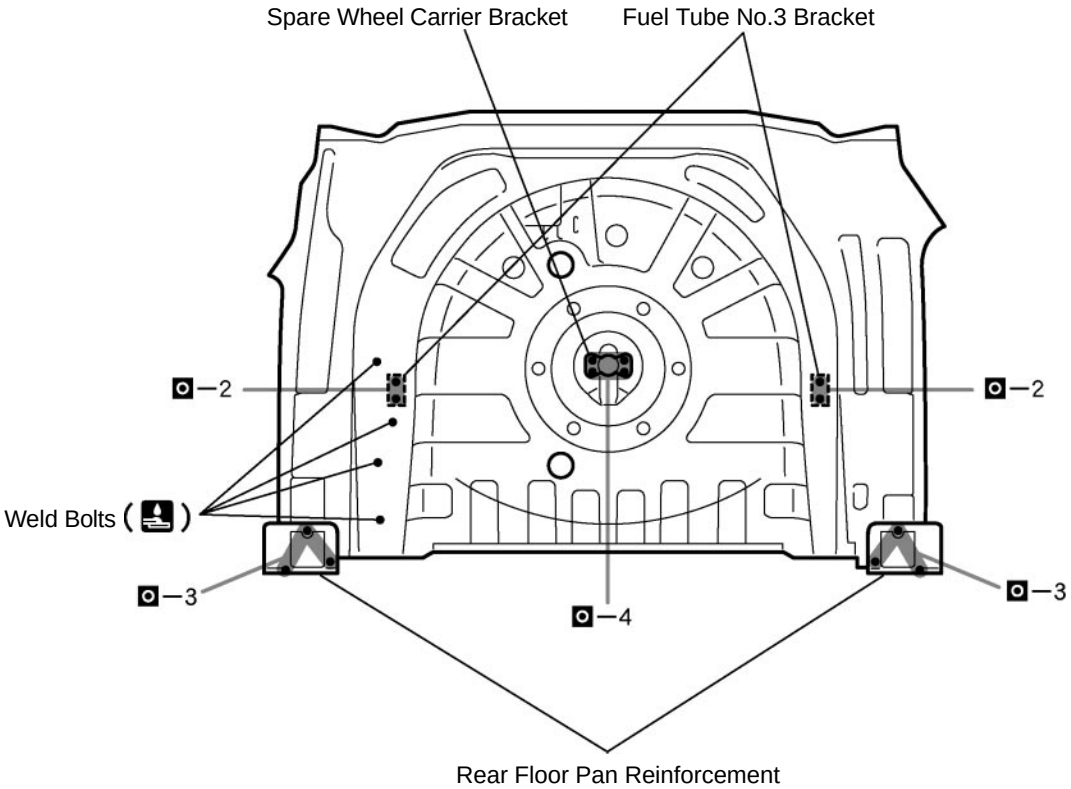

F25917

INSTALLATION POINT

1 Before temporarily installing the new parts, weld the spare wheel carrier bracket, fuel tube No.3 bracket, rear floor pan reinforcement and weld bolts with the standard number of welding points.

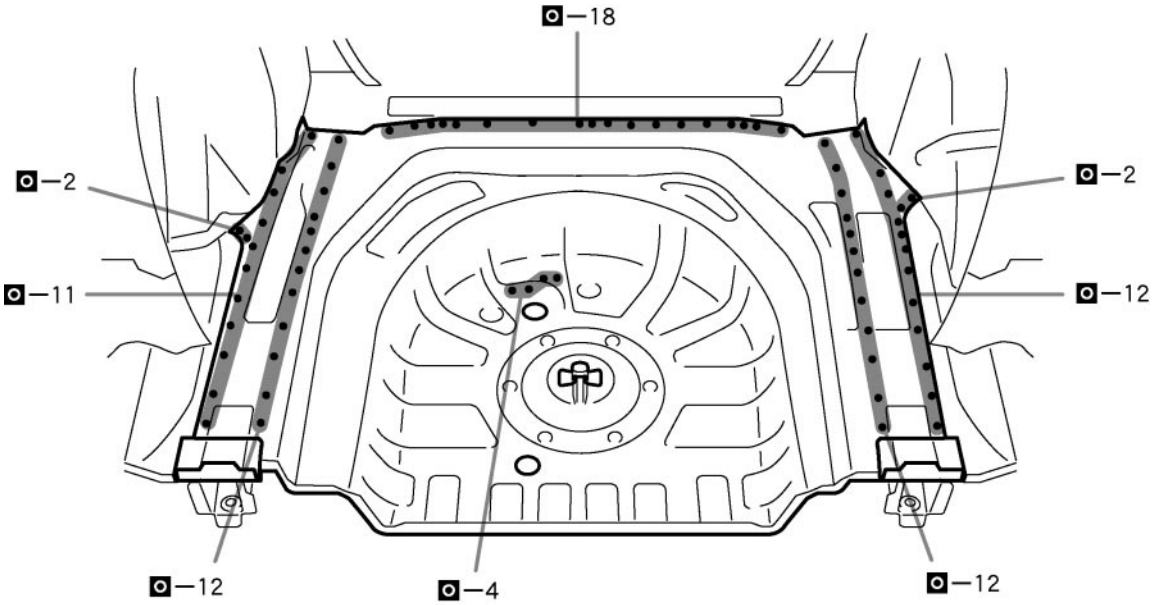

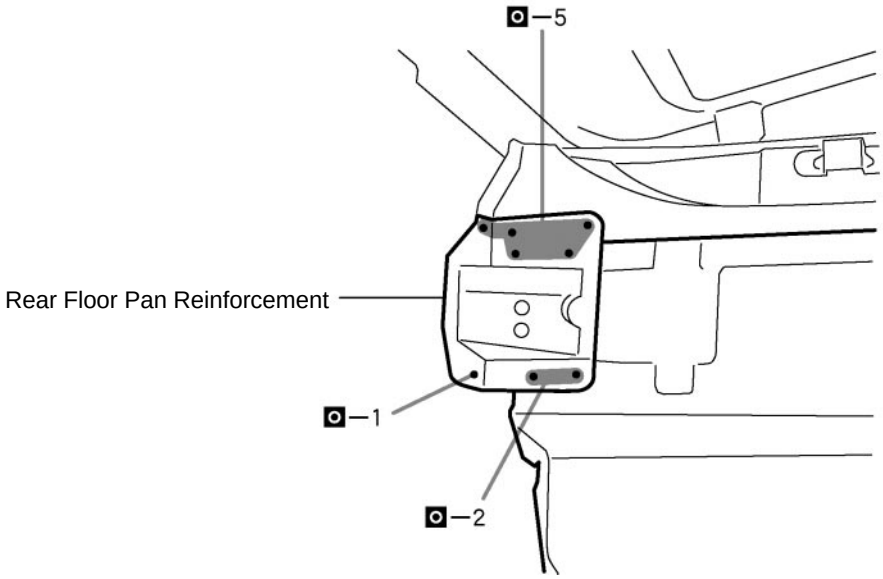

F25918

Symbol meaning

O M I : MIG Plug Weld : Tack Weld

F25917B

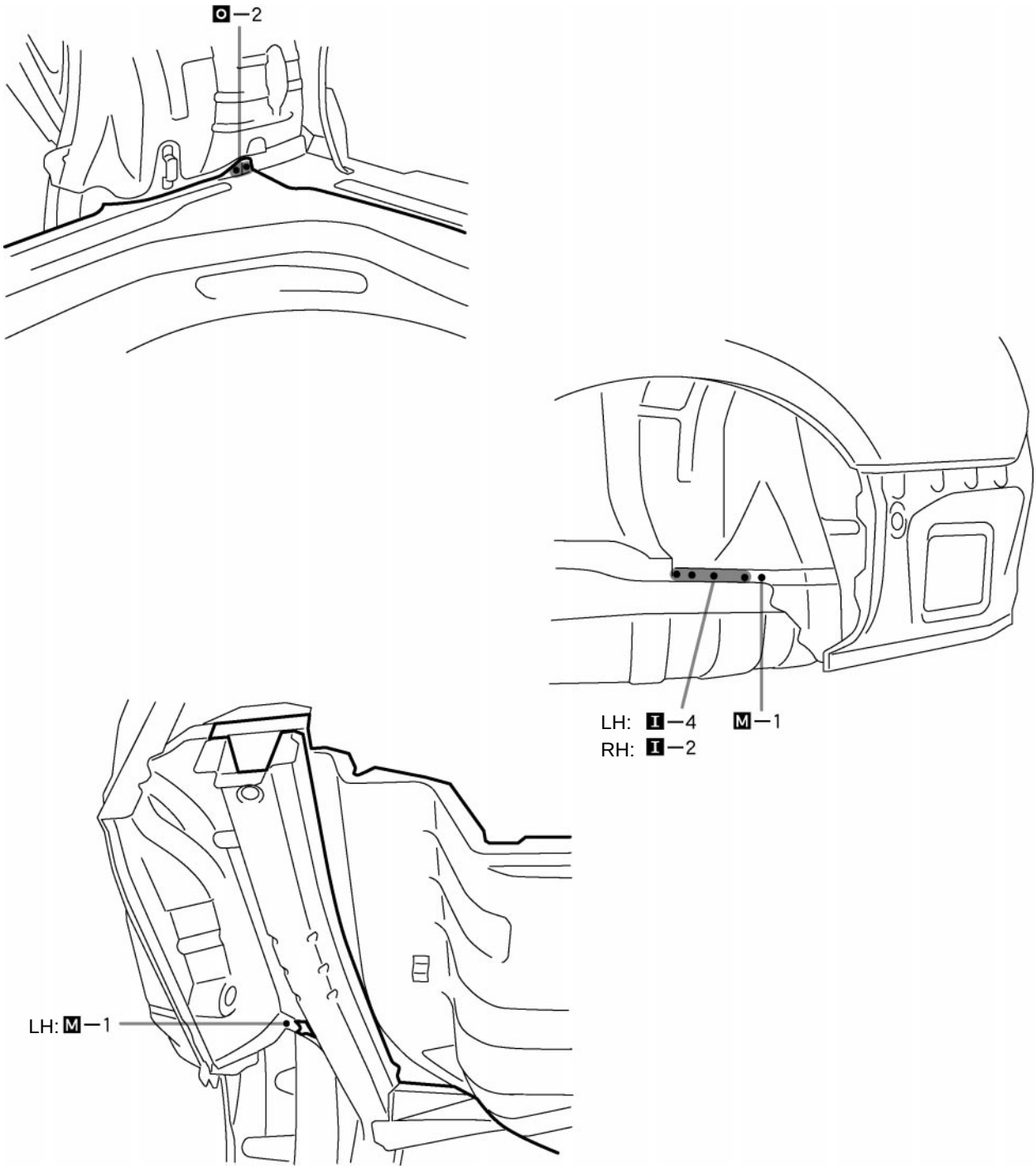

F25919

INSTALLATION POINT

1 After welding, apply body sealer and undercoating to the corresponding parts. (See the paint·coating)

2 After applying the top coat, apply anti-rust agent to the internal panel portion of the closed section structural weld points.